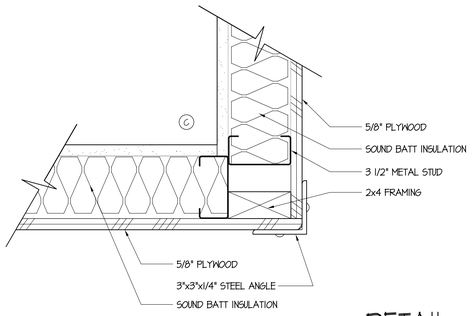

DETAIL
SCALE: 3"= 1'-0"

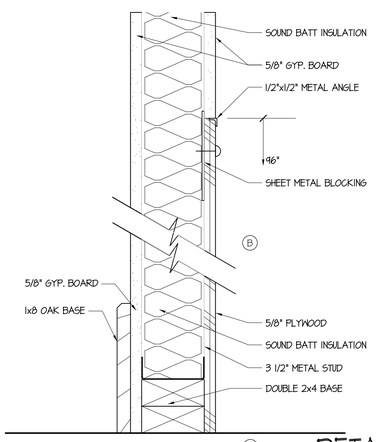

DETAIL
SCALE: 3"= 1'-0"

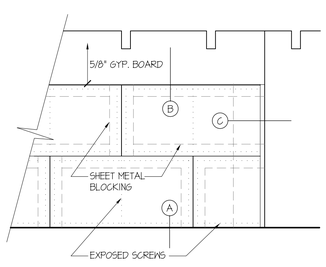

PLYWOOD WAINSCOT ELEVATION
SCALE: 1/4"= 1'-0"

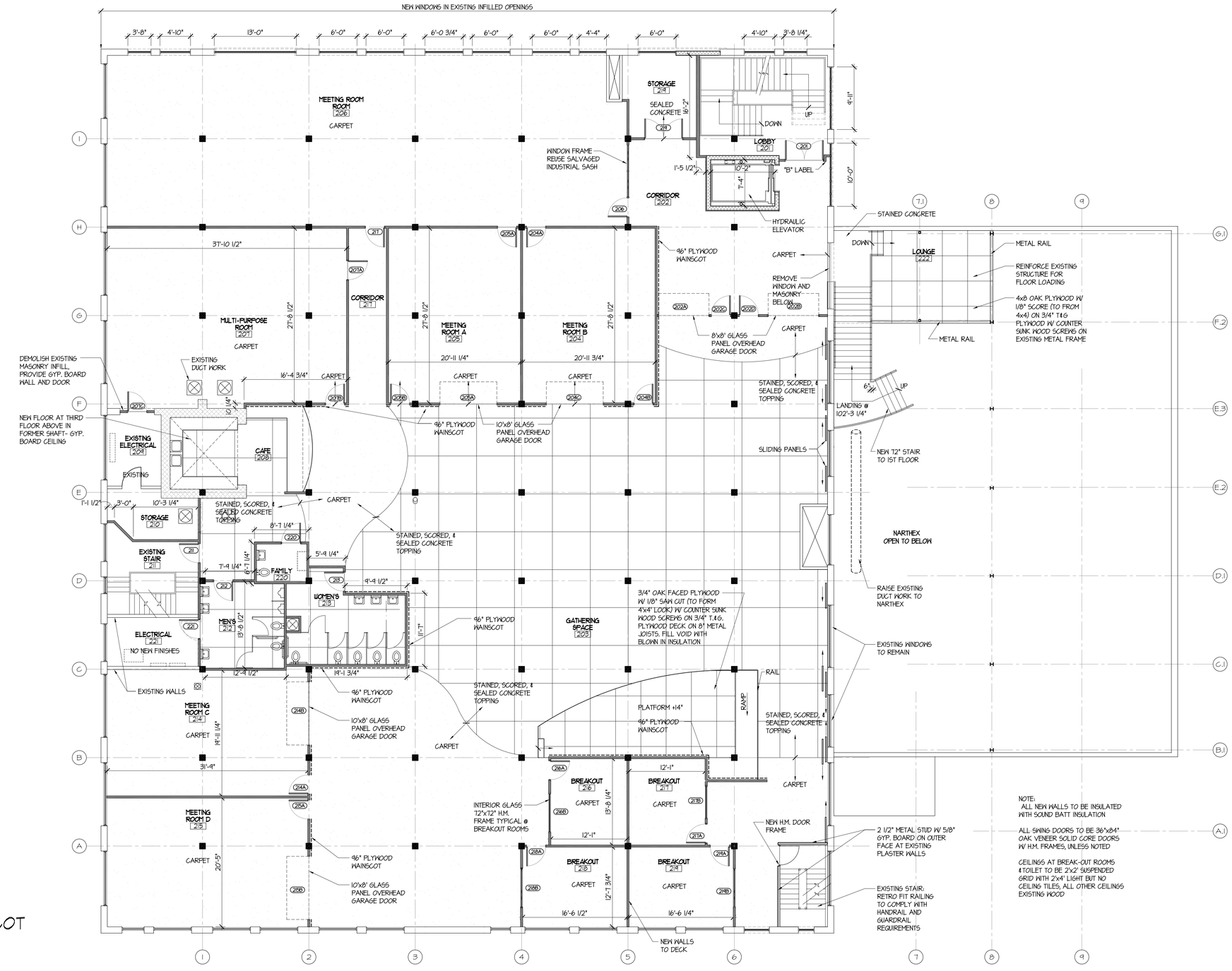

NOTE:
ALL NEW WALLS TO BE INSULATED WITH SOUND BATT INSULATION

ALL SWING DOORS TO BE 36"x84" OAK VENEER SOLID CORE DOORS W/ H.M. FRAMES, UNLESS NOTED

CEILINGS AT BREAK-OUT ROOMS & TOILET TO BE 2'x2' SUSPENDED GRID WITH 2'x4' LIGHT NO CEILING TILES, ALL OTHER CEILINGS EXISTING WOOD

FLOOR PLAN
SCALE: 1/8" = 1'-0"

DATE	ISSUED FOR:

DATE	ISSUED FOR:
12/1/08	PROPOSALS

COVENANT LIFE CHURCH
101 COLUMBUS AVE., GRAND HAVEN, MI

25 S. DIVISION, SUITE 222
Grand Rapids, MI 49503
Telephone 616-774-2313
Fax 616-774-8322
CRAIG Architecture Interior Design Facility Management

DRAWN BY:
CHECKED BY:
PLOT DATE:

© copyright — all rights reserved. These drawings remain the property of Craig Architecture, Inc. and are for uses authorized by the Architect only.

SHEET
A-102

FILE
0002-1MA

S:\dwg\0002-1MA\A-102.dwg, 12/1/2008 4:31:10 PM